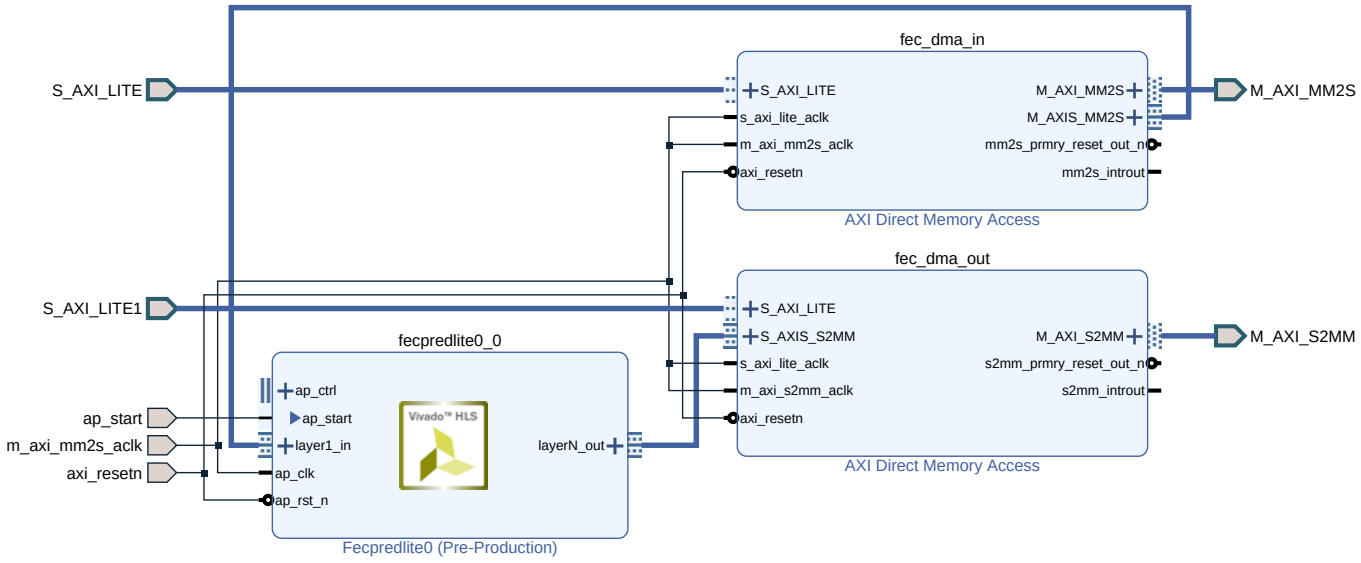
S_AXI_LITE
S_AXI_LITE1
ap_start
m_axi_mm2s_aclk
axi_resetn
fec_dma_in
S_AXI_LITE
s_axi_lite_aclk
m_axi_mm2s_aclk
axi_resetn
M_AXI_MM2S
M_AXIS_MM2S
mm2s_prmry_reset_out_n
mm2s_introut
AXI Direct Memory Access
M_AXI_MM2S
fec_dma_out
S_AXI_LITE
S_AXIS_S2MM
s_axi_lite_aclk
m_axi_s2mm_aclk
axi_resetn
M_AXI_S2MM
s2mm_prmry_reset_out_n
s2mm_introut
AXI Direct Memory Access
M_AXI_S2MM
fecpredlite0_0
ap_ctrl
ap_start
layer1_in
ap_clk
ap_rst_n
Vivado™ HLS
layerN_out
Fecpredlite0 (Pre-Production)